PRODUCT SHEET

Description:
Shower Hinge "Linz", Wall/Glass, Black, Offset Back Pl, 2 Holes, 6-10mm Glass Thickness, W/15 DG Angle Adjustment, Function & 15DG Return Function, Brass Material, Rectangular, Shape w/Chamferede Edges

Item number:
15.26.743-4

Units	Box	Carton	HS Code	Barcode
Pcs.	1	20	8302100090	5704866505307

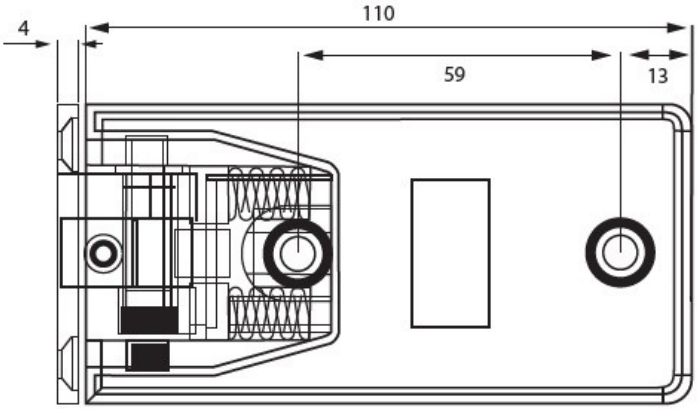

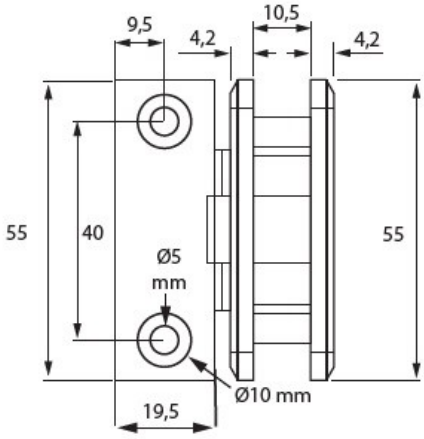

SISO A/S
Mileparken 11
DK-2740 Skovlunde
Denmark
VAT: 24786013

Phone +45 45 830 900

www.siso.dk
siso@siso.dk

Danske Bank
Nytorv Branch
Copenhagen
SWIFT: DABADKKK

Account no.
4180 3112 112936
IBAN Account
DK7230003112112936